SIZE CODE D CS NUMBER M7050-0-1 REV C

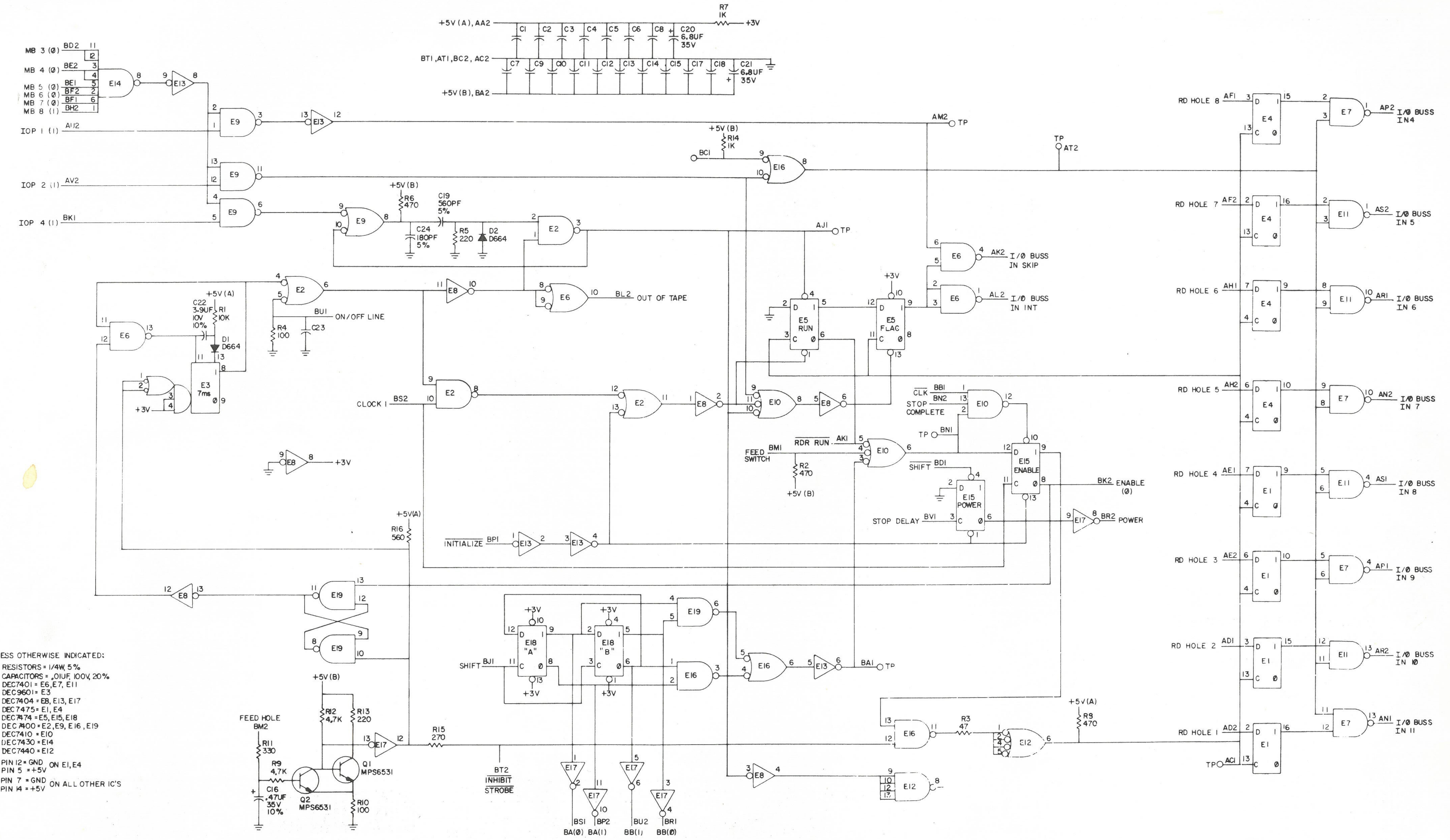
MB 3 (0) BD2
MB 4 (0) BE2
MB 5 (0) BE1
MB 6 (0) BF2
MB 7 (0) BF1
MB 8 (1) BH2
E14
E13
IOP 1 (1) AU2
IOP 2 (1) AV2
IOP 4 (1) BK1
E9
+5V (A), AA2
C1 C2 C3 C4 C5 C6 C8
C20 6.8UF 35V
R7 1K
+3V
BT1, AT1, BC2, AC2
C7 C9 C10 C11 C12 C13 C14 C15 C17 C18
C21 6.8UF 35V
+5V (B), BA2
AM2 TP
+5V (B)
R14 1K
BC1
E16
TP AT2
R6 470
C19 560PF 5%
C24 180PF 5%
R5 220
D2 D664
E2
AJ1 TP
E6
AK2 I/0 BUSS IN SKIP
AL2 I/0 BUSS IN INT
E8
BL2 OUT OF TAPE
+5V (A)
C22 3.9UF 10V 10%
R1 10K
D1 D664
E3 7ms
R4 100
C23
BU1 ON/OFF LINE
E5 RUN
E5 FLAG
CLOCK 1 BS2
E10
CLK BB1
STOP COMPLETE BN2
TP BN1
RDR RUN AK1
FEED SWITCH BM1
R2 470
+5V (B)
SHIFT BD1
E15 POWER
E15 ENABLE
BK2 ENABLE (0)
STOP DELAY BV1
E17
BR2 POWER
INITIALIZE BP1
+5V(A)
R16 560
E19
E18 "A"
E18 "B"
SHIFT BJ1
BA1 TP
FEED HOLE BM2
R11 330
R9 4.7K
C16 .47UF 35V 10%
Q2 MPS6531
Q1 MPS6531
R12 4.7K
R13 220
R10 100
R15 270
BT2 INHIBIT STROBE
BS1 BA(0)
BP2 BA(1)
BU2 BB(1)
BR1 BB(0)
R3 47
E12
+5V (A)
R9 470
RD HOLE 8 AF1
RD HOLE 7 AF2
RD HOLE 6 AH1
RD HOLE 5 AH2
RD HOLE 4 AE1
RD HOLE 3 AE2
RD HOLE 2 AD1
RD HOLE 1 AD2
TP AC1
E4
E1
E7
E11
AP2 I/0 BUSS IN 4
AS2 I/0 BUSS IN 5
AR1 I/0 BUSS IN 6
AN2 I/0 BUSS IN 7
AS1 I/0 BUSS IN 8
AP1 I/0 BUSS IN 9
AR2 I/0 BUSS IN 10
AN1 I/0 BUSS IN 11

UNLESS OTHERWISE INDICATED:

RESISTORS = 1/4W, 5%
CAPACITORS = .01UF, 100V, 20%
DEC7401 = E6, E7, E11
DEC9601 = E3
DEC7404 = E8, E13, E17
DEC7475 = E1, E4
DEC7474 = E5, E15, E18
DEC7400 = E2, E9, E16, E19
DEC7410 = E10
DEC7430 = E14
DEC7440 = E12

PIN 12 = GND ON E1, E4
PIN 5 = +5V

PIN 7 = GND ON ALL OTHER IC'S
PIN 14 = +5V

REVISIONS		
REV	CHG NO	CHK
C	00001	

DRN	DATE
NANCY MOORE	2/2/71
CHKD	DATE
	2-24-71
ENG	DATE
	4-?-71
PROD	DATE

TRANSISTOR & DIODE CONVERSION CHART

DEC	EIA	DEC	EIA
MPS6531	MPS6531	D664	IN3606

digital EQUIPMENT CORPORATION
MAYNARD MASSACHUSETTS

TITLE
READER CONTROL

SIZE	CODE	NUMBER	REV
D	CS	M7050-0-1	C

PRINTED CIRCUIT REV D

DEC FORM NO.
[illegible] 116

SIZE	CODE	NUMBER	REV.
B	CS	5408918-0-1	A

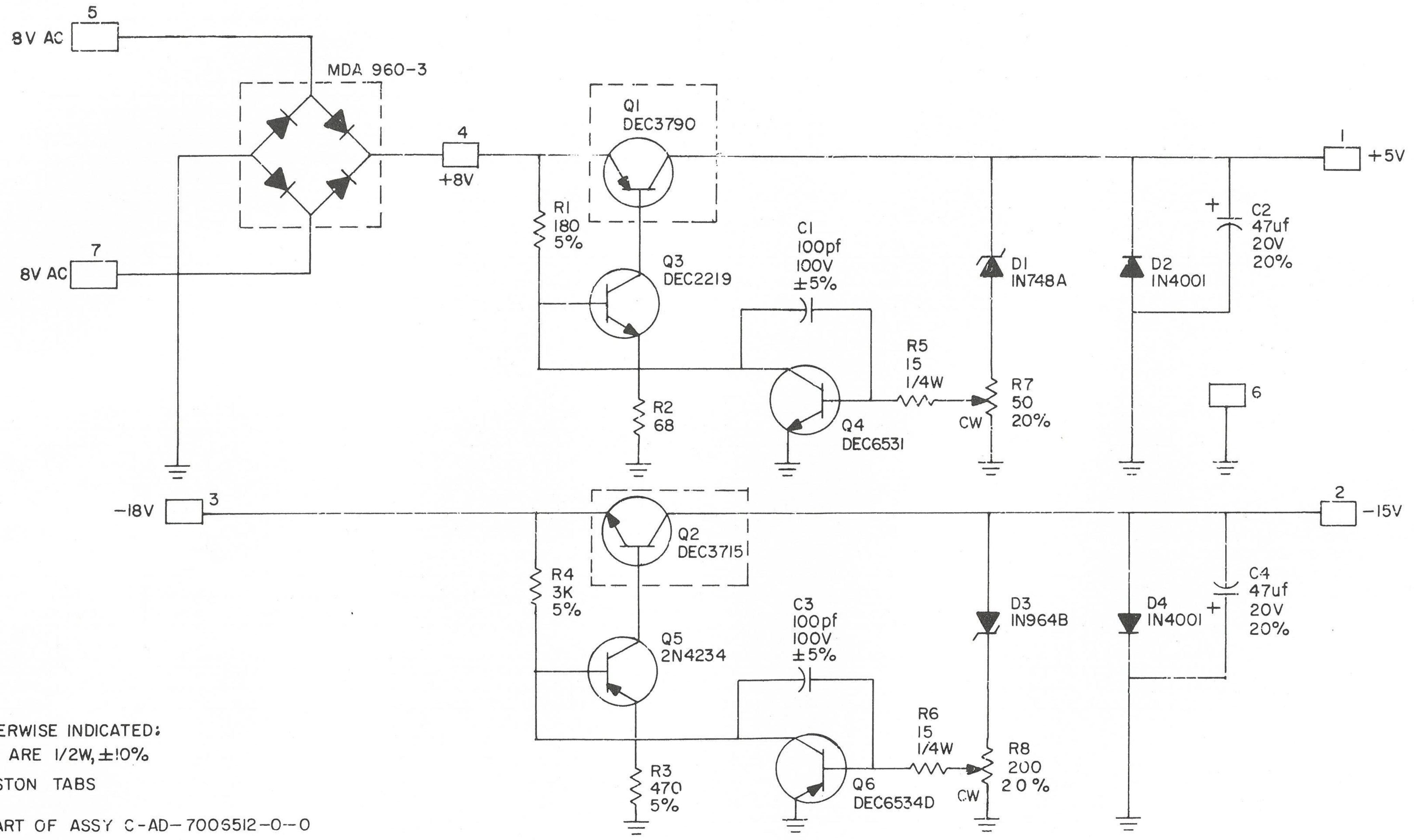
5
8V AC
MDA 960-3
7
8V AC
4
+8V
Q1
DEC3790
R1
180
5%
Q3
DEC2219
R2
68
C1
100pf
100V
±5%
Q4
DEC6531
R5
15
1/4W
R7
50
20%
CW
D1
IN748A
D2
IN4001
C2
47uf
20V
20%
1
+5V
6
3
-18V
Q2
DEC3715
R4
3K
5%
Q5
2N4234
R3
470
5%
C3
100pf
100V
±5%
Q6
DEC6534D
R6
15
1/4W
R8
200
20%
CW
D3
IN964B
D4
IN4001
C4
47uf
20V
20%
2
-15V

UNLESS OTHERWISE INDICATED:
RESISTORS ARE 1/2W, ±10%
☐ = FASTON TABS
⬚ PART OF ASSY C-AD-7006512-0-0

REVISIONS		
REV		
CHG NO.		
CHK		

DRN. NANCY MOORE	DATE 7/8/70
CHK'D Ordway	DATE 8/8/70
ENG.	DATE 10/12/70
PROD.	DATE

TRANSISTOR & DIODE CONVERSION CHART

DEC	EIA	DEC	EIA
DEC3790-2	2N3790	DEC6531	MPS6531
DEC2219	2N2219	IN748A	SAME
DEC3715	2N3715	IN964B	SAME
2N4234	2N4234	IN4001	SAME
DEC6534D	MPS6534		

digital
EQUIPMENT CORPORATION
MAYNARD, MASSACHUSETTS

TITLE	PCO REGULATOR 5408918		
SIZE B	CODE CS	NUMBER 5408918-0-1	REV. A
PRINTED CIRCUIT REV.	B		

DEC FORM NO
DRB 102

DNE 324,434.135 Pink 5

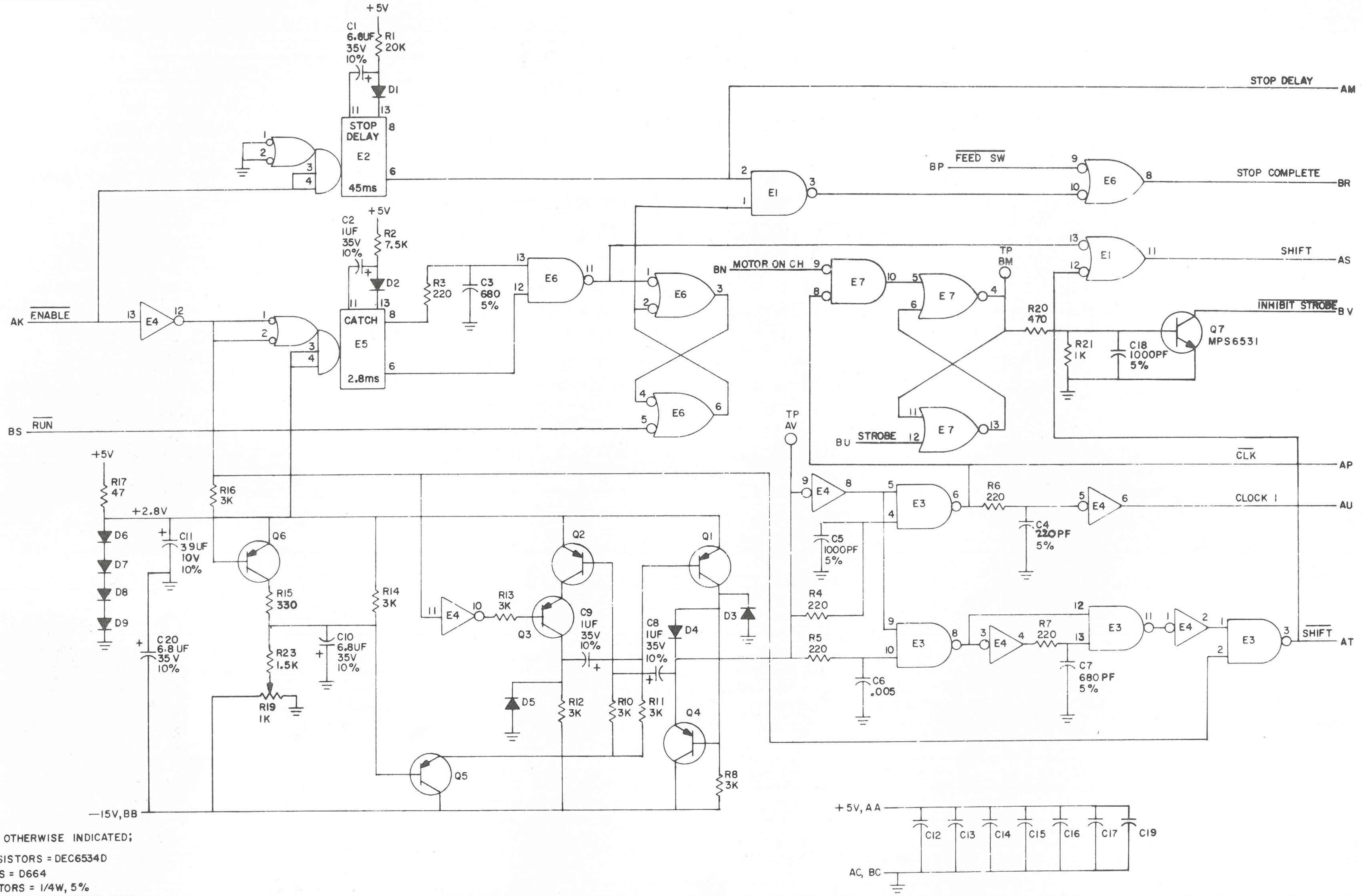
+5V
C1 6.8UF 35V 10%
R1 20K
D1
11 13
STOP DELAY E2 45ms
1 2 3 4 6 8
+5V
C2 1UF 35V 10%
R2 7.5K
D2
CATCH E5 2.8ms
R3 220
C3 680 5%
E6
STOP DELAY
AM
BP FEED SW
E1
E6
STOP COMPLETE
BR
BN MOTOR ON CH
E7
TP BM
SHIFT
AS
R20 470
R21 1K
C18 1000PF 5%
Q7 MPS6531
INHIBIT STROBE
BV
AK ENABLE
E4
BS RUN
BU STROBE
TP AV
CLK
AP
R6 220
C4 220PF 5%
CLOCK 1
AU
E3
C5 1000PF 5%
R4 220
R5 220
C6 .005
R7 220
C7 680 PF 5%
SHIFT
AT
+5V
R17 47
+2.8V
D6 D7 D8 D9
C11 39UF 10V 10%
C20 6.8UF 35V 10%
R16 3K
Q6
R15 330
R23 1.5K
R19 1K
C10 6.8UF 35V 10%
R14 3K
R13 3K
Q3
Q2
C9 1UF 35V 10%
D5
R12 3K
R10 3K
C8 1UF 35V 10%
R11 3K
Q1
D3
D4
Q4
R8 3K
Q5
—15V, BB
+5V, AA
C12 C13 C14 C15 C16 C17 C19
AC, BC

UNLESS OTHERWISE INDICATED;

TRANSISTORS = DEC6534D
DIODES = D664
RESISTORS = 1/4W, 5%
CAPACITORS = .01UF, 100V, 20%
E1, E3, E6 = DEC7400
E4 = DEC7404
E2, E5 = DEC9601
PIN 7 = GND ON ALL IC'S
PIN 14 = +5V ON ALL IC'S
E7 = DEC7402

REVISIONS

CHK	CHG NO.	REV.
AY	00002	E
	00006 REV & REDR & CANCELS ECO 00005	K
R.G.	00007 00008	L

DEC FORM NO.
DRC 102

DRN.	M. HALLER	DATE	10/16/67
CHK'D	R. SILVERMAN	DATE	11/2/67
ENG.	R. G. SOGGE	DATE 2/11/71	11/2/67
PROD.		DATE	

TRANSISTOR & DIODE CONVERSION CHART

DEC	EIA	DEC	EIA
DEC6534D	MPS6534	IN758	SAME
D664	IN3606		
DEC6531	MPS6531		

digital
EQUIPMENT CORPORATION
MAYNARD MASSACHUSETTS

TITLE
READER CLOCK M715

SIZE	CODE	NUMBER	REV.
C	CS	M715-0-1	L

PRINTED CIRCUIT REV. F

324, 434, 435 2 4 PINK

SIZE	CODE	NUMBER	REV.
C	CS	M715-0-1	L

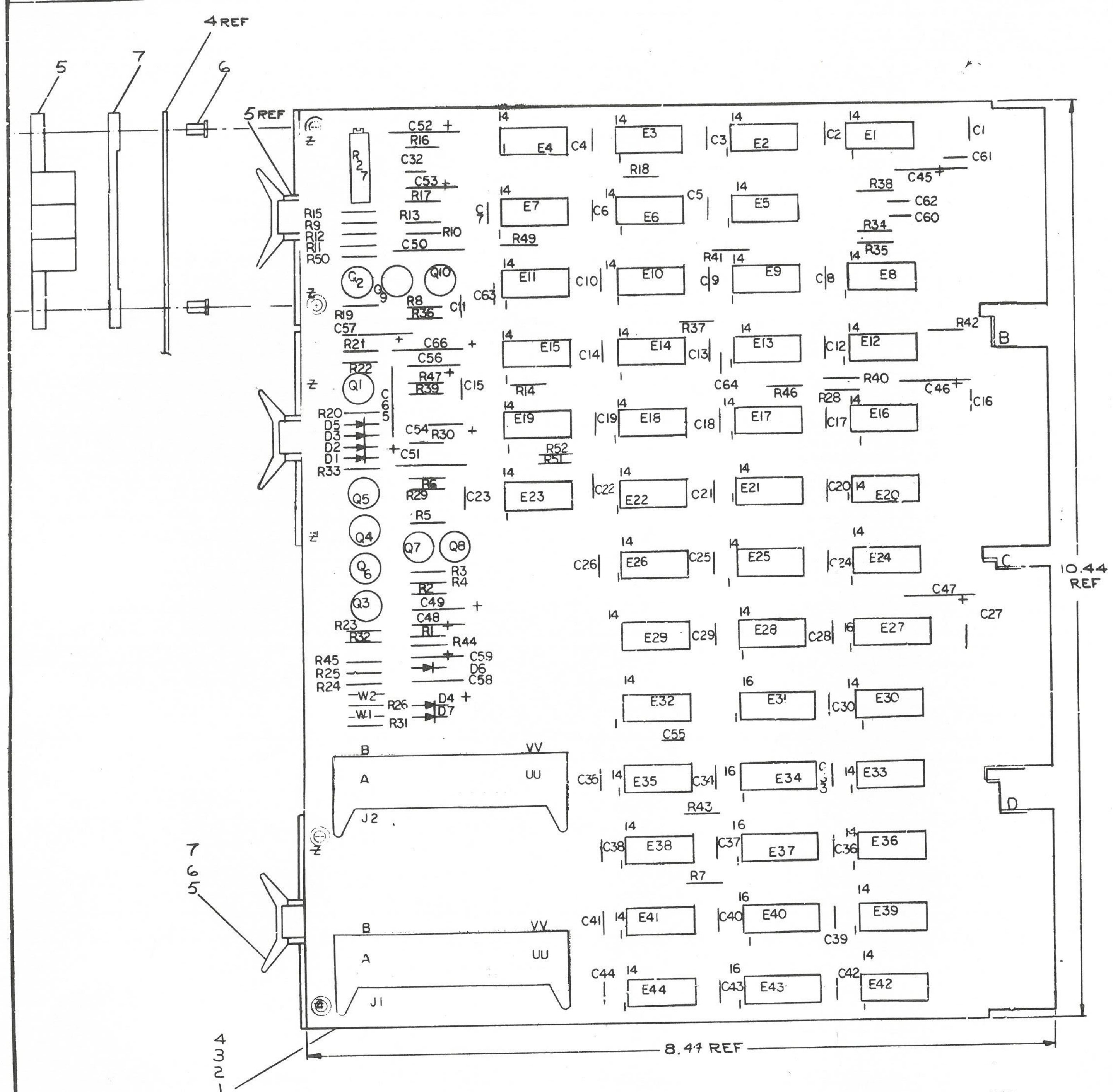
4 REF
5
7
6
5 REF
5REF
R27
C52
R16
C32
C53
R17
R13
R10
C50
R15
R9
R12
R11
R50
Q2
Q9
Q10
R8
R36
C11
C63
R19
C57
R21
R22
C66
C56
R47
R39
C15
Q1
C65
R20
D5
D3
D2
D1
R33
C54
R30
C51
R6
R29
R5
C23
Q5
Q4
Q6
Q7
Q8
Q3
R3
R4
R2
C49
C48
R1
R44
R23
R32
R45
R25
R24
C59
D6
C58
W2
W1
R26
R31
D4
D7
E1
E2
E3
E4
E5
E6
E7
E8
E9
E10
E11
E12
E13
E14
E15
E16
E17
E18
E19
E20
E21
E22
E23
E24
E25
E26
E27
E28
E29
E30
E31
E32
E33
E34
E35
E36
E37
E38
E39
E40
E41
E42
E43
E44
C1
C2
C3
C4
C5
C6
C7
C8
C9
C10
C12
C13
C14
C16
C17
C18
C19
C20
C21
C22
C24
C25
C26
C27
C28
C29
C30
C31
C33
C34
C35
C36
C37
C38
C39
C40
C41
C42
C43
C44
C45
C46
C47
C55
C60
C61
C62
C64
R7
R14
R18
R28
R34
R35
R37
R38
R40
R41
R42
R43
R46
R49
R51
R52
14
16
B
C
D
VV
UU
A
J2
J1
10.44 REF
8.44 REF
7
6
5
4
3
2
1

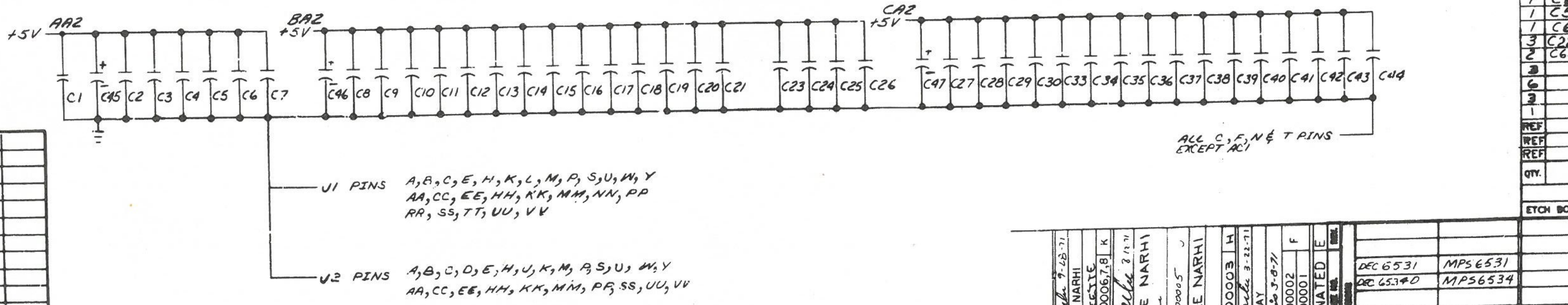
+5V
AA2
BA2
CA2
C1
C45
C2
C3
C4
C5
C6
C7
C46
C8
C9
C10
C11
C12
C13
C14
C15
C16
C17
C18
C19
C20
C21
C23
C24
C25
C26
C47
C27
C28
C29
C30
C33
C34
C35
C36
C37
C38
C39
C40
C41
C42
C43
C44

ALL C, F, N & T PINS EXCEPT AC1

J1 PINS A, B, C, E, H, K, L, M, P, S, U, W, Y
AA, CC, EE, HH, KK, MM, NN, PP
RR, SS, TT, UU, VV

J2 PINS A, B, C, D, E, H, J, K, M, P, S, U, W, Y
AA, CC, EE, HH, KK, MM, PP, SS, UU, VV

QTY.	REF DESIGNATION	DESCRIPTION	PART NO.	ITEM NO.
1	C61	CAP 1500PF 250V, 10% DISC	54	63
1	C55	CAP .005UF 100V, 20% DISC	1001765	62
1	R44	RES 75 1/4W 5%	1302379	61
A/R	W1, W2	WIRE 22 AWG SOLID BUS	9107560-01	60
1	E35	IC DEC 7720	9105577	59
1	R49	RES 270 1/4W 5%	1301972	58
1	R9	RES 5.6K 1/4W 5%	1301874	57
1	R13	RES 150 1/4W 5%	1300250	56
1	R8	RES 56 1/4W 5%	1302602	55
1	R21	RES 680 1/4W 5%	1301424	54
1	R47	RES 18K 1/4W 10%	1300498	53
2	J1, J2	CONN 40 PIN RT. ANGLE HEADER	1209941	52
4	E34, E37, E40, E43	IC DEC 8271	1909615	51
~~1~~	~~E38~~	~~IC DEC 7440~~	~~1905579~~	~~50~~
2	E27, E31	IC DEC 8251	1909E54	49
4	E17, E18, E33, E39	IC DEC 8881	1909705	48
2	E21, E25	IC DEC 6314	1909972	47
5	E20, E24, E30, E36, E42	IC DEC 380	1909485	46
7	E3, E8, E26, E29, E38, E41, E44	IC DEC 7404	1909686	45
4	E4, E7, E15, E19	IC DEC 9601	1909373	44
1	E16	IC DEC 384	1909486	43
2	E1, E11	IC DEC 7410	1905576	42
7	E5, E6, E13, E22, E23, E28, E32	IC DEC 7400	1905575	41
5	E2, E9, E10, E12, E14	IC DEC 7474	1905547	40
2	Q7, Q8,	TRANSISTOR DEC 6531	1509338	39
8	Q1-Q6, Q9, Q10	TRANSISTOR DEC 6534D	15C3409-00	38
7	R1, R4, R6, R18, R34, R38, R51	RES 220 1/4W 5%	1300271	37
22	R7, R28, R11, R12, R14, R15, R19, R20, R23, R24-R26, R31, R32, R37, R40-R43, R45, R22, R52	RES 3K 1/4W 5%	1300432	36
1	R27,	RES 1K 3/4W 10% 76PR	1309143-07	35
~~2~~	~~R38, R43~~	~~RES 910 1/4W 5%~~	~~[illegible]~~	~~34~~
~~1~~	~~R8~~	~~RES 82 1/4W 5%~~	~~1301477~~	~~33~~
1	R17	RES 7.5K 1/4W 5%	1301422	32
~~1~~	~~R23~~	~~RES 750 1/4W 5%~~	~~1301401~~	~~31~~
1	R16	RES 15K 1/4W 5%	1300496	30
1	R39	RES 12K 1/4W 5%	1300488	29
3	R30, R36, R46	RES 10K 1/4W 5%	1300479	28
2	R2, R3	RES 4.7K 1/4W 5%	1300447	27
1	R50	RES 1.5K 1/4W 5%	1300391	26
1	R35	RES 330 1/4W 5%	1300295	25
2	R5, R10	RES 100 1/4W 5%	1300229	24
2	R29, R33	RES 47 1/4W 5%	1300202	23
~~1~~	~~D3~~	~~DIODE 1N7384 SPARE~~	~~1100125~~	~~22~~
3	D4, D6, D7	DIODE D664	1100114	21
4	D1, D2, D3, D5	DIODE D662	1100113	20
41	C1-C21, C33-44, C23-C30	CAP .01UF 100V 20% DISC	1001610	19
5	C45, C46, C47, C57, C66	CAP 6.8UF 35V 10% TANT	1005306	18
2	C50, C51,	CAP .01UF 100V 10% MYLAR	1005784	17
2	C48, C49	CAP .33UF 20V 10% TANT	1005328	16
1	C52	CAP 15UF 20V 10% TANT	1004812	15
1	C56	CAP 2.2UF 20V 10% TANT	1002627	14
3	C53, C58, C59	CAP 1UF 35V 10% TANT	1001776	13
1	C65	CAP 39UF 10V 10% TANT	1000076	12
1	C54	CAP 3.9UF 10V 10% TANT	1000064	11
1	C60	CAP 1000PF 100V 5% MICA	1000042	10
3	C22, C32, C62	CAP 680PF 100V 5% DM	1000026	9
2	C63, C64	CAP 330PF 100V 5% DM	1000023	8
2		SPACER (CABLE CLAMP)	1202704	7
6		EYELET GS4-11 STIMPSON	9006750	6
2		HANDLE FLIP CHIP-MAGENTA	9008337-06	5
1		ETCHED CIRCUIT BOARD	5008848	4
REF		MODULE HISTORY LIST	B-MH-M840-0-6	3
REF		ASSY/DRILLING HOLE LAYOUT	D-AH-M840-0-5	2
REF		X-Y COORDINATE HOLE LOC.	K-CO-M840-0-4	1

PARTS LIST

ETCH BOARD REV J

IC TYPE	GND	+5V
IC 384	1	8
IC 6314	1	8
IC 8271	8	16
IC 380	1	8

GND AND 5V ARE USUALLY PIN 7 AND 14 RESPECTFULLY EXCEPTIONS ARE STATED ABOVE

IC PIN LOCATIONS

ITEM NO	AWG	FROM PT	TO PT
59	22	W2-A	W2-B
59	22	W1-A	W1-B

JUMPER LIST

REV.	CHANGE NO.	REVISIONS	CHK.
K	M840-00006,7,8	LAWRENCE NARHI	Larry Narhi 9-28-71 Roger Doucette
J	1978 YC-00005	LAWRENCE NARHI	Larry Narhi 8-12-71
H	M840-00003	LAWRENCE NARHI	Larry Narhi 3-22-71
F	M840-00002	BOB GRAY	Ken Davis 3-8-71
E	M840-00001	ORIGINATED	

DEC NO.	EIA NO.	DEC NO.	EIA NO.
DEC 6531	MPS6531		
DEC 6534D	MPS6534		
D664	1N3606		
D662	1N645		

SEMICONDUCTOR CONVERSION CHART

DRN. Ken Davis DATE 2-18
CHKD. DATE 2-21
ENG. Larry Narhi DATE 2-24-71
PROJ. ENG. DATE 2-23-71
PROD. DATE

FIRST USED ON A-ML-PC8-E

digital EQUIPMENT CORPORATION MAYNARD MASSACHUSETTS

TITLE READER/PUNCH CONTROL

SIZE E CODE CS NUMBER M840-0-1 REV. K

SCALE 2/1
SHEET 1 OF 3
DIST.

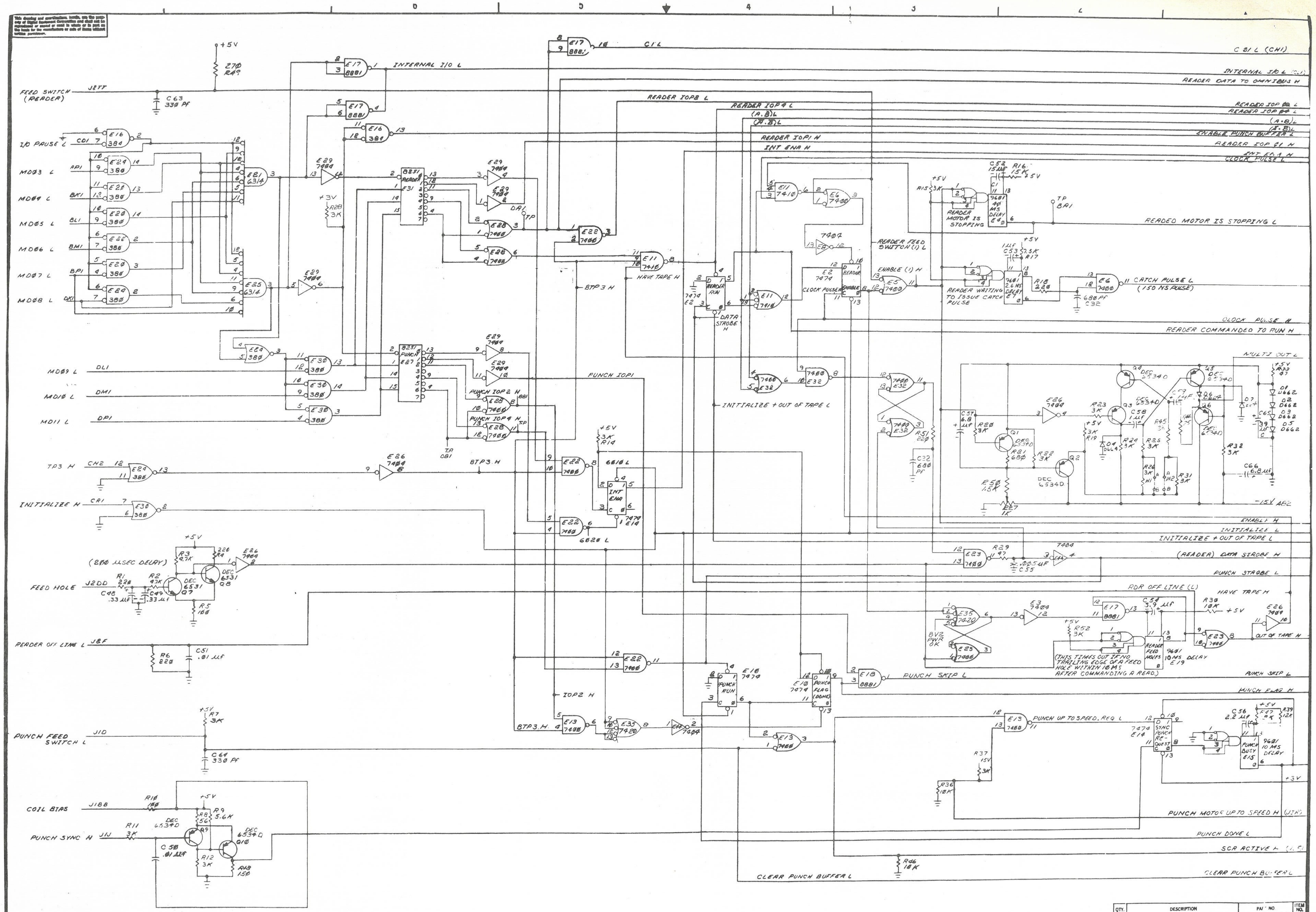
FEED SWITCH (READER)
I/O PAUSE L
MD03 L
MD04 L
MD05 L
MD06 L
MD07 L
MD08 L
MD09 L
MD10 L
MD11 L
TP3 H
INITIALIZE H
(200 μSEC DELAY)
FEED HOLE
READER OFF LINE L
PUNCH FEED SWITCH L
COIL BIAS
PUNCH SYNC H
INTERNAL I/O L
C1 L
READER IOP8 L
READER IOP4 L
READER IOP1 H
INT ENA H
HAVE TAPE H
BTP3 H
DATA STROBE H
PUNCH IOP1
PUNCH IOP2 H
PUNCH IOP4 H
INITIALIZE + OUT OF TAPE L
IOP2 H
PUNCH RUN
PUNCH FLAG
PUNCH SKIP L
PUNCH UP TO SPEED REQ L
CLEAR PUNCH BUFFER L
C B1 L (CH1)
INTERNAL I/O L
READER DATA TO OMNIBUS H
READER IOP 8 L
READER IOP 4 L
(A·B) L
(A·B) L
ENABLE PUNCH BUFFER L
READER IOP 1 H
INT ENA H
CLOCK PULSE L
READER MOTOR IS STOPPING
READER MOTOR IS STOPPING L
READER FEED SWITCH (1) L
ENABLE (1) H
CLOCK PULSE
READER RUN
READER WAITING TO ISSUE CATCH PULSE
CATCH PULSE L (150 NS PULSE)
CLOCK PULSE H
READER COMMANDED TO RUN H
MULTI OUT L
-15V
ENABLE H
INITIALIZE L
INITIALIZE + OUT OF TAPE L
(READER) DATA STROBE H
PUNCH STROBE L
RDR OFF LINE (L)
HAVE TAPE H
(THIS TIMES OUT IF NO TRAILING EDGE OF A FEED HOLE WITHIN 10 MS AFTER COMMANDING A READ)
READER FEED HOLES
OUT OF TAPE H
PUNCH SKIP L
PUNCH FLAG H
SYNC PUNCH REQUEST
PUNCH BUSY
PUNCH MOTOR UP TO SPEED H
PUNCH DONE L
SCR ACTIVE H
CLEAR PUNCH BUFFER L

QTY.	DESCRIPTION	PART NO.	ITEM NO.

PARTS LIST

UNLESS OTHERWISE SPECIFIED

UNLESS OTHERWISE SPECIFIED
DIMENSION IN INCHES
TOLERANCES
DECIMALS ± .005
FRACTIONS ± 1/64
ANGLES ± 0°30'
FINAL SURFACE QUALITY ✓
REMOVE BURRS AND BREAK SHARP CORNERS

MATERIAL —

FINISH —

DRN. DATE
CHK'D. DATE 1-22-71
ENG. DATE 2-24-71
PROJ. ENG. DATE
PROD. DATE
FIRST USED ON —
SCALE N/A
SHEET 2 OF 3

digital EQUIPMENT CORPORATION
MAYNARD, MASSACHUSETTS

TITLE
READER/PUNCH CONTROL

SIZE E CODE CS NUMBER M840-0-1 REV

DIST.

This drawing and specifications, herein, are the property of Digital Equipment Corporation and shall not be reproduced or copied or used in whole or in part as the basis for the manufacture or sale of items without written permission.

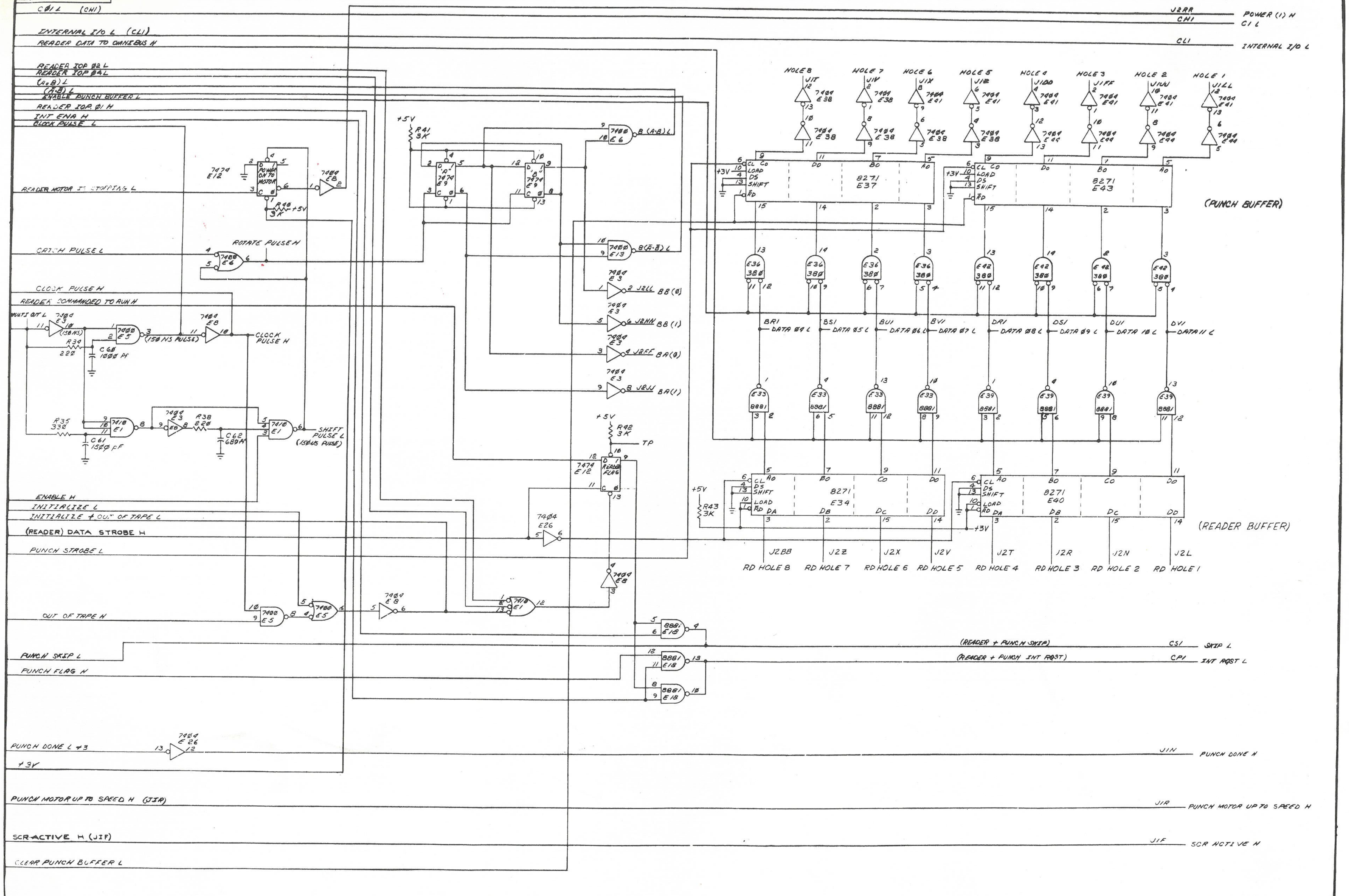
CØ1 L (CHI)
INTERNAL I/O L (CLI)
READER DATA TO OMNIBUS H
READER IOP Ø2 L
READER IOP Ø4 L
(A·B) L
(A·B̄) L
ENABLE PUNCH BUFFER L
READER IOP Ø1 H
INT ENA H
CLOCK PULSE L
READER MOTOR IS STOPPING L
7474 E12
POWER ON TO MOTOR
7404 E8
R40 3K +5V
CATCH PULSE L
ROTATE PULSE H
7400 E6
CLOCK PULSE H
READER COMMANDED TO RUN H
MULTI OUT L
7404 E3
(150 NS)
7400 E5
(150 NS PULSE)
R39 220
C60 1000 PF
CLOCK PULSE H
R35 330
C61 1500 PF
7410 E1
R38 220
C62 680 PF
SHIFT PULSE L (150NS PULSE)
ENABLE H
INITIALIZE L
INITIALIZE + OUT OF TAPE L
(READER) DATA STROBE H
PUNCH STROBE L
OUT OF TAPE H
PUNCH SKIP L
PUNCH FLAG H
PUNCH DONE L +3
7404 E26
+3V
PUNCH MOTOR UP TO SPEED H (J1R)
SCR ACTIVE H (J1F)
CLEAR PUNCH BUFFER L
+5V
R41 3K
7474 E9
"A"
"B"
7400 E6
B (A·B) L
7400 E13
B (A·B̄) L
J2LL BB(0)
J2HH BB(1)
J2FF BA(0)
J2JJ BA(1)
R42 3K
TP
READER FLAG
7474 E12
7404 E26
7410 E1
8881 E18
HOLE 8 J1T
HOLE 7 J1V
HOLE 6 J1X
HOLE 5 J1Z
HOLE 4 J1DD
HOLE 3 J1FF
HOLE 2 J1JJ
HOLE 1 J1LL
7404 E38
7404 E41
7404 E44
CL LOAD DS SHIFT R̄D
8271 E37
8271 E43
(PUNCH BUFFER)
E36 380
E42 380
BR1 DATA Ø4 L
BS1 DATA Ø5 L
BU1 DATA Ø6 L
BV1 DATA Ø7 L
DR1 DATA Ø8 L
DS1 DATA Ø9 L
DU1 DATA 10 L
DV1 DATA 11 L
E33 8881
E39 8881
+5V
R43 3K
8271 E34
8271 E40
+3V
(READER BUFFER)
J2BB RD HOLE 8
J2Z RD HOLE 7
J2X RD HOLE 6
J2V RD HOLE 5
J2T RD HOLE 4
J2R RD HOLE 3
J2N RD HOLE 2
J2L RD HOLE 1
J2RR POWER (1) H
CH1 C1 L
CL1 INTERNAL I/O L
(READER + PUNCH SKIP)
CS1 SKIP L
(READER + PUNCH INT RQST)
CP1 INT RQST L
J1N PUNCH DONE H
J1R PUNCH MOTOR UP TO SPEED H
J1F SCR ACTIVE H

QTY.	DESCRIPTION	PART NO.	ITEM NO.
	PARTS LIST		

UNLESS OTHERWISE SPECIFIED
DIMENSION IN INCHES
TOLERANCES
DECIMALS ± .005 FRACTIONS ± 1/64 ANGLES ± 0°30'
FINAL SURFACE QUALITY ✓
REMOVE BURRS AND BREAK SHARP CORNERS

MATERIAL
FINISH

DRN. DATE 1-6-71
CHK'D. DATE 1-12-71
ENG. DATE 2-16-71
PROJ. ENG. DATE
PROD. DATE

SCALE
SHEET 3 OF 3

digital EQUIPMENT CORPORATION
MAYNARD MASSACHUSETTS

TITLE
READER / PUNCH CONTROL

SIZE E CODE CS NUMBER M840-0-1 REV. K

DIST.

SIZE	CODE	NUMBER	REV.
B	CS	5408308-0-1	C

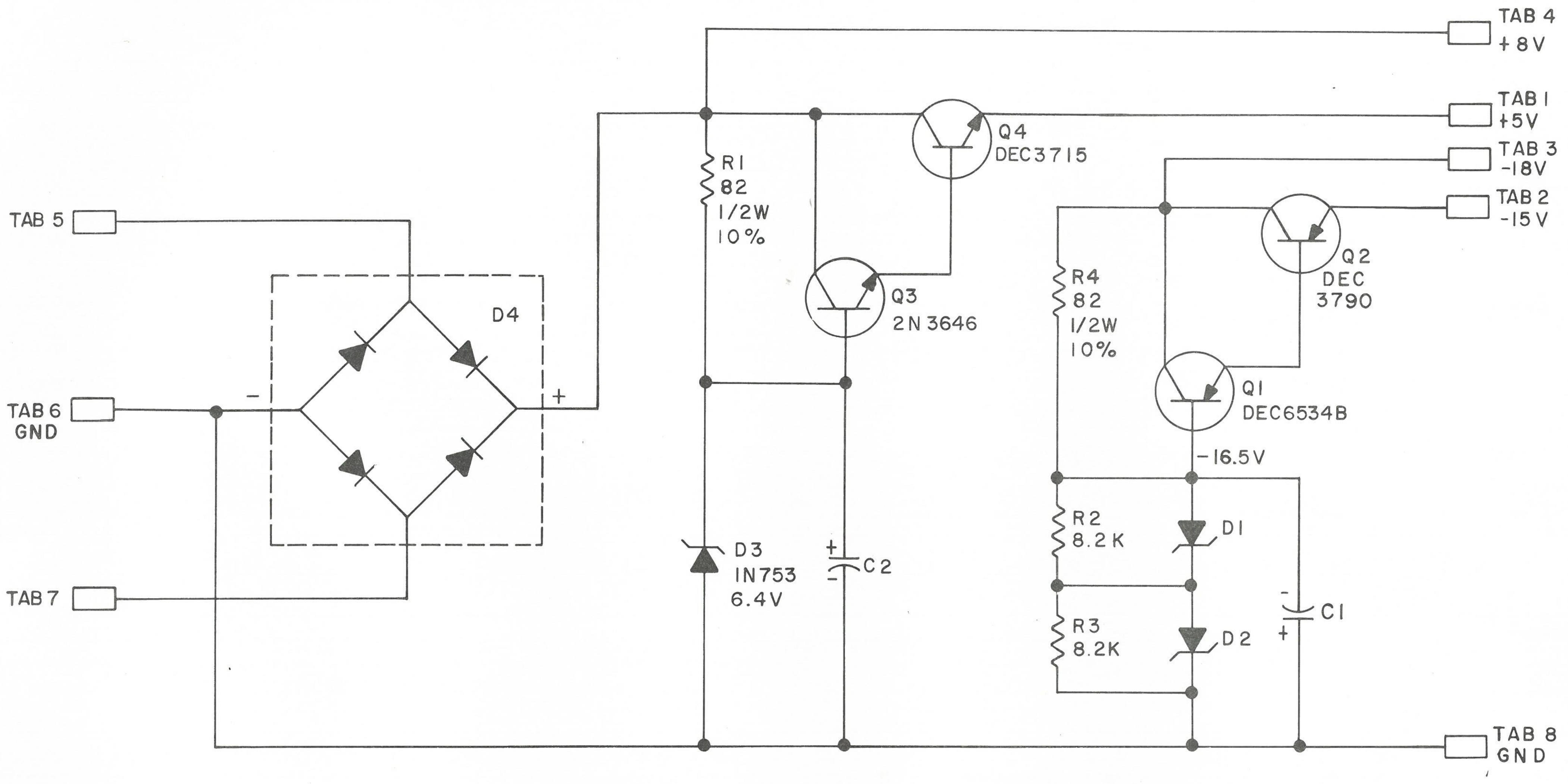
TAB 4
+8V
TAB 1
+5V
TAB 3
-18V
TAB 2
-15V
Q4
DEC3715
R1
82
1/2W
10%
Q3
2N3646
R4
82
1/2W
10%
Q2
DEC
3790
TAB 5
D4
TAB 6
GND
-
+
Q1
DEC6534B
-16.5V
D3
IN753
6.4V
C2
R2
8.2K
D1
C1
R3
8.2K
D2
TAB 7
TAB 8
GND

UNLESS OTHERWISE INDICATED:
CAPACITORS ARE 6.8 MFD 35V 20%
DIODES ARE IN756A, 8.2V
D4 IS MDA960-3
RESISTORS ARE 1/4W 5%
TABS ARE AMP 41290

REVISIONS		
REV.	CHG NO.	CHK
A	00001	Mm
B	00002	MH
C	00003	JH

DRN. RGutiérrez	DATE 3-31-69
CHK'D M. Marchand	DATE 4/1/69
ENG: Dick Able 9.13.	DATE 9-14-69
PROD.	DATE

TRANSISTOR & DIODE CONVERSION CHART

DEC	EIA	DEC	EIA
IN753	SAME	2N3646	2N3009
IN756A	SAME		
DEC3790	2N3790		
DEC6534B	MPS6534		
DEC3715	NONE		

digital
EQUIPMENT
CORPORATION
MAYNARD, MASSACHUSETTS

TITLE PCO POWER SUPPLY REGULATOR 5408308

SIZE	CODE	NUMBER	REV.
B	CS	5408308-0-1	C

PRINTED CIRCUIT REV. D

DEC FORM NO.
DRB 102